Circuit Diagram

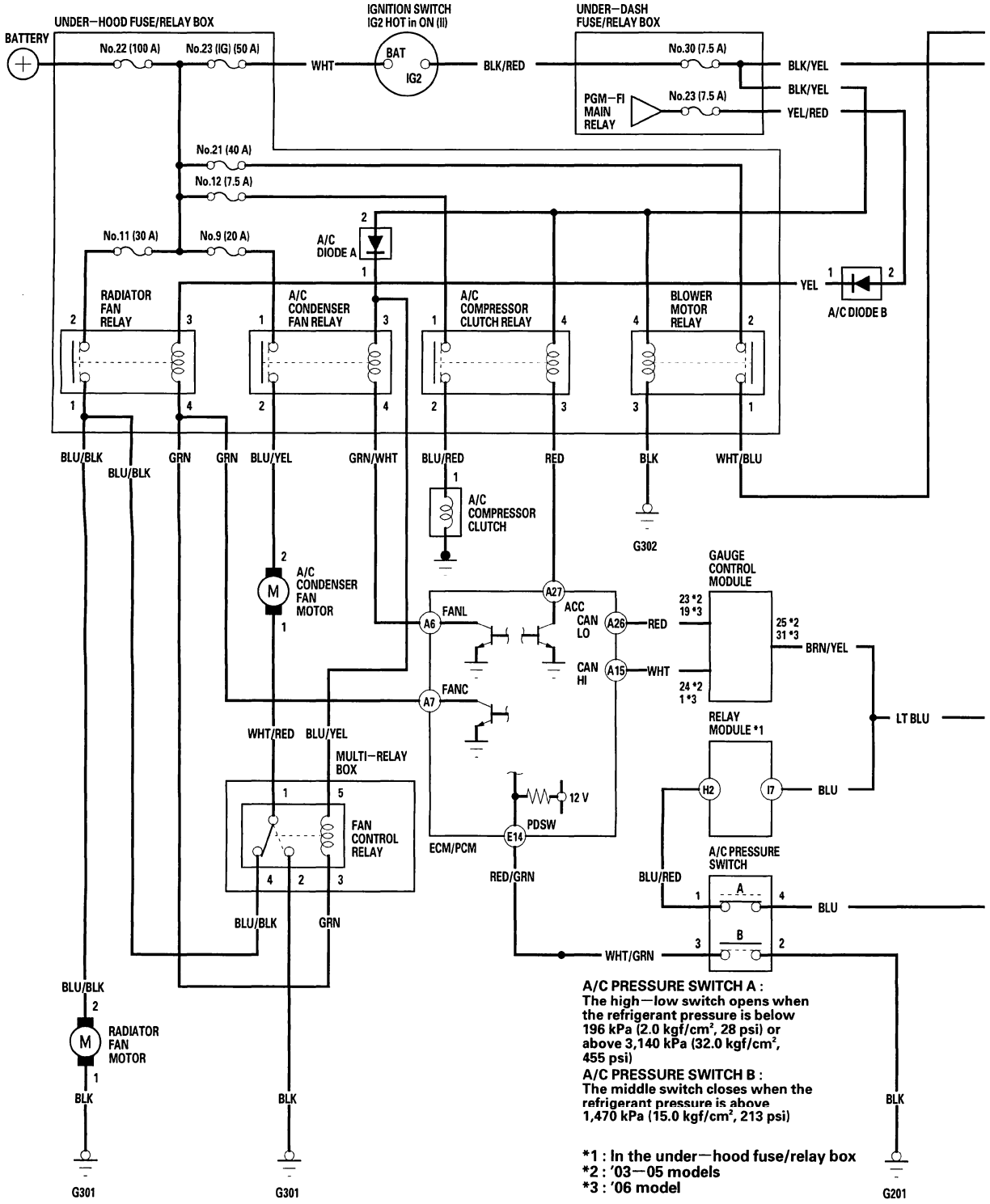

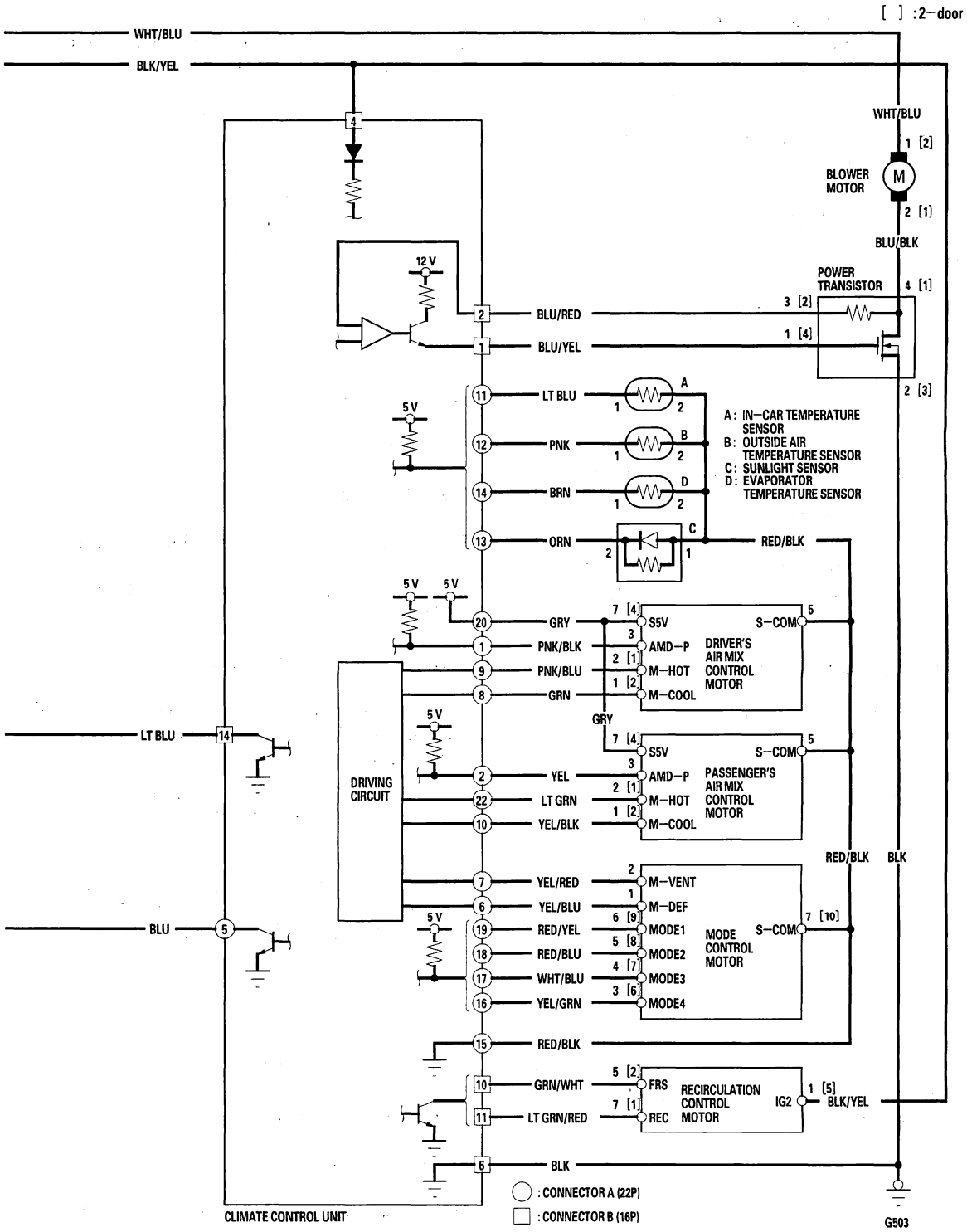
[ ] :2-door
WHT/BLU
BLK/YEL
WHT/BLU
BLOWER MOTOR
M
BLU/BLK
POWER TRANSISTOR
12 V
BLU/RED
BLU/YEL
LT BLU
PNK
BRN
ORN
5 V
A: IN-CAR TEMPERATURE SENSOR
B: OUTSIDE AIR TEMPERATURE SENSOR
C: SUNLIGHT SENSOR
D: EVAPORATOR TEMPERATURE SENSOR
RED/BLK
GRY
PNK/BLK
PNK/BLU
GRN
S5V
AMD-P
M-HOT
M-COOL
S-COM
DRIVER'S AIR MIX CONTROL MOTOR
PASSENGER'S AIR MIX CONTROL MOTOR
DRIVING CIRCUIT
YEL
LT GRN
YEL/BLK
YEL/RED
YEL/BLU
RED/YEL
RED/BLU
WHT/BLU
YEL/GRN
M-VENT
M-DEF
MODE1
MODE2
MODE3
MODE4
MODE CONTROL MOTOR
BLK
GRN/WHT
LT GRN/RED
FRS
REC
RECIRCULATION CONTROL MOTOR
IG2
BLK/YEL
BLU
CLIMATE CONTROL UNIT
: CONNECTOR A (22P)
: CONNECTOR B (16P)
G503