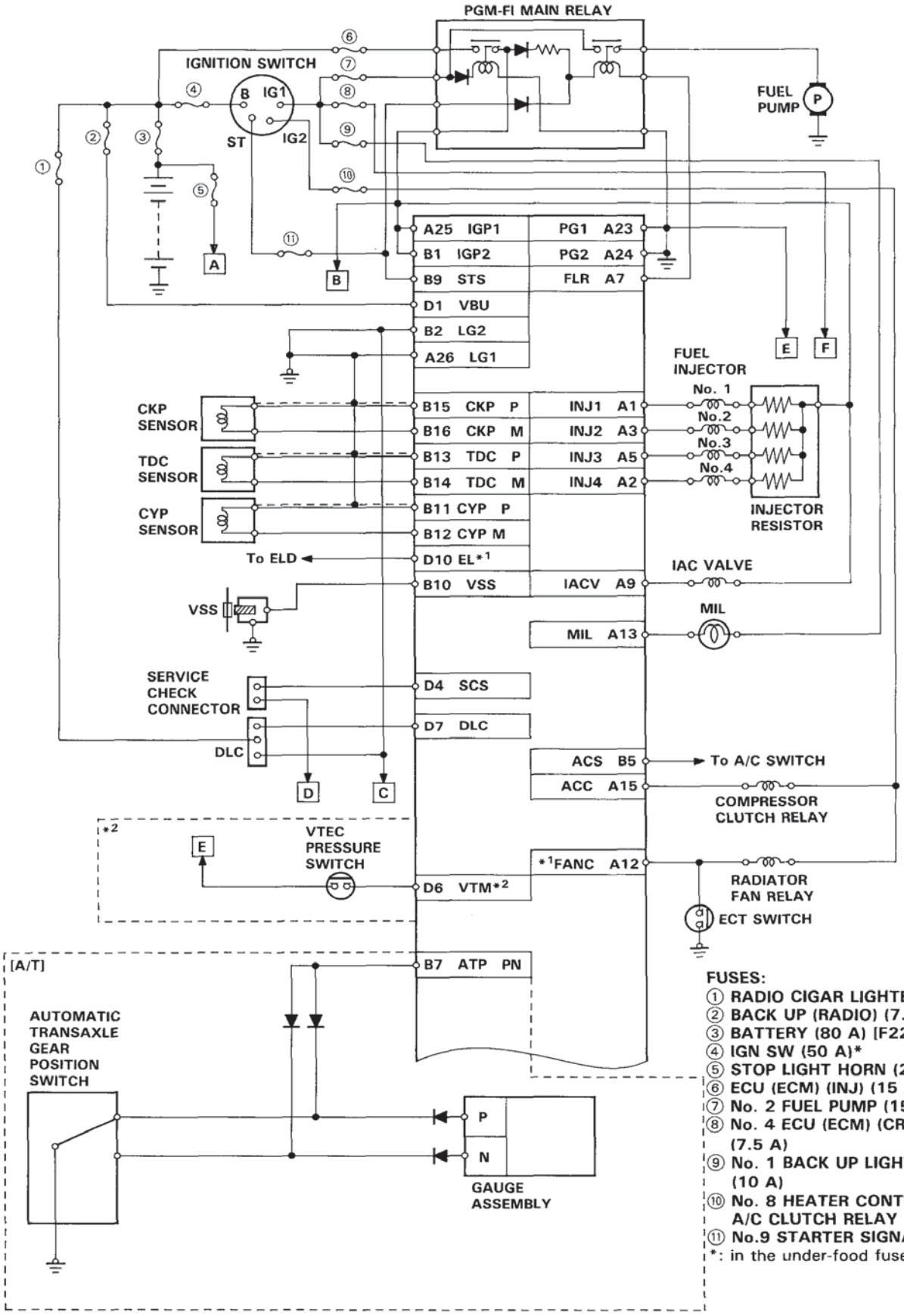Electrical Connections