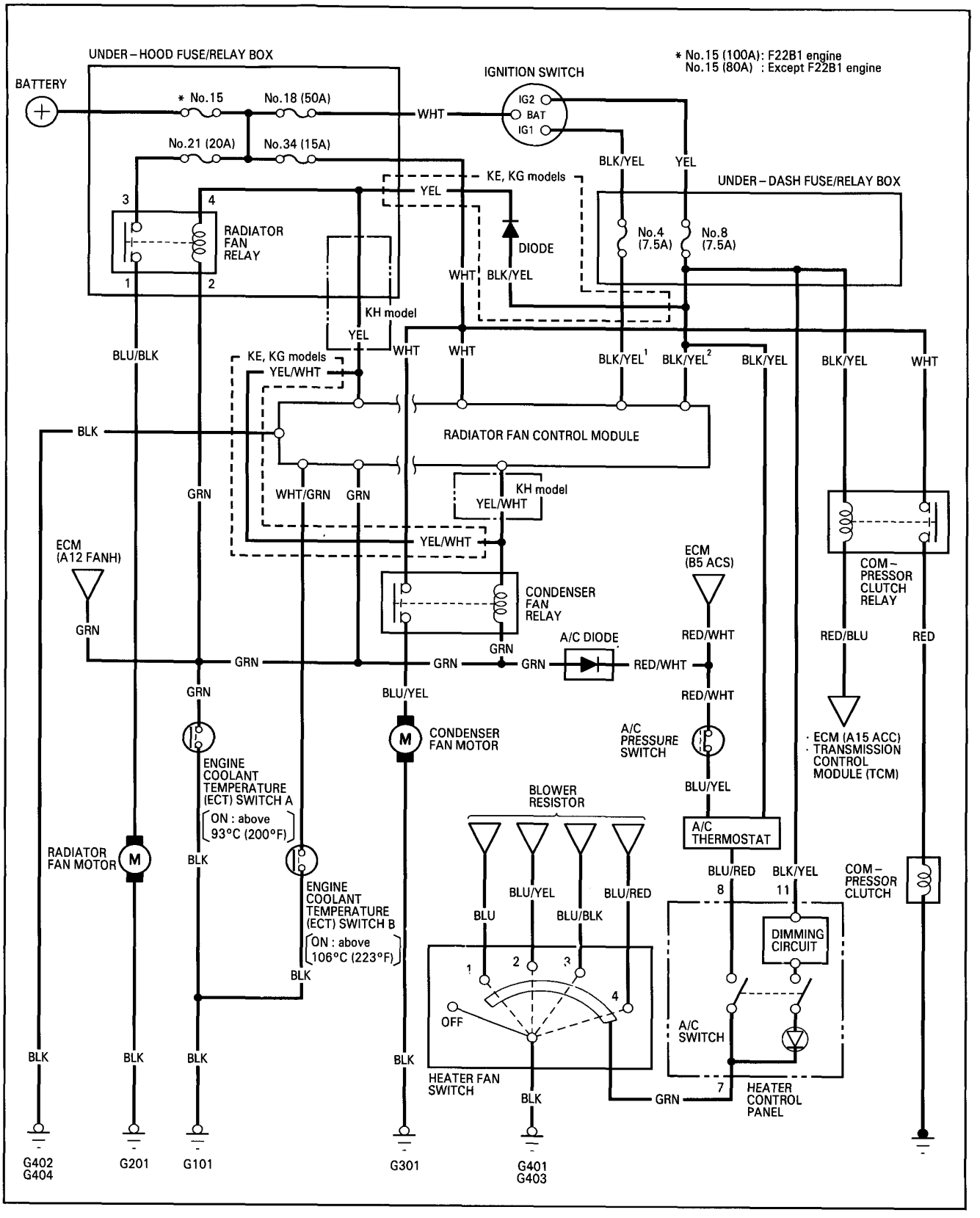Circuit Diagram