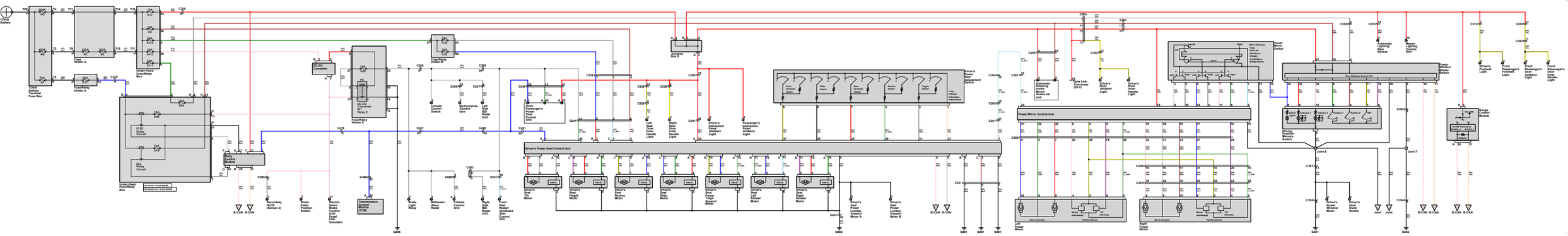
12Volt Battery
12Volt Battery Feed Box Fuse Box
Fuse Holder A
Fuse/Relay Holder A
Under-Hood Fuse/Relay Box
DC-DC Converter
Fuse/Relay Holder B
Junction Box B
Driver's Power Seat Control Unit
Power Mirror Control Unit
Left Power Mirror
Right Power Mirror
Power Tailgate Master Switch
Rear Multiplex Control Unit
Under-Dash Fuse/Relay Box
Transmission Control Module (TCM)
Brake Pedal Position Switch
Electric Servo Brake Control Unit
Accel Pedal Position Sensor
Secondary (Sensor 2)
Brake Light Relay
Millimeter Wave Radar
Climate Control Unit
Right Side Blind Spot Radar Unit
Front Seat Ventilated Seat Control Unit
Driver's Seat Tilt Motor
Driver's Seat Height Motor
Driver's Seat Recline Motor
Driver's Seat Slide Motor
Driver's Seat Power Lumbar Support Motor
Driver's Seat Left Lumbar Motor
Driver's Seat Right Lumbar Motor
Driver's Seat Lumbar Support Motor A
Driver's Seat Lumbar Support Motor B
Driver's Door Ambient Light
Driver's Door Inner Handle Light
Data Link Connector (DLC)
Automatic Dimming Inner Mirror/ HomeLink Unit
Driver's Door Power Mirror Motor
Driver's Door Outer Handle
Joint 9
Joint 7
Joint
Automatic Lighting/ Rain Sensor
Water Lighting Control Unit
Driver's Foglamp Light
Front Passenger's Foglamp Light
Front Passenger's Door Ambient Light
Front Passenger's Door Outer Handle Light
Charge Control Module
Driving Position Memory Switch
B-CAN
G206
G302
G301